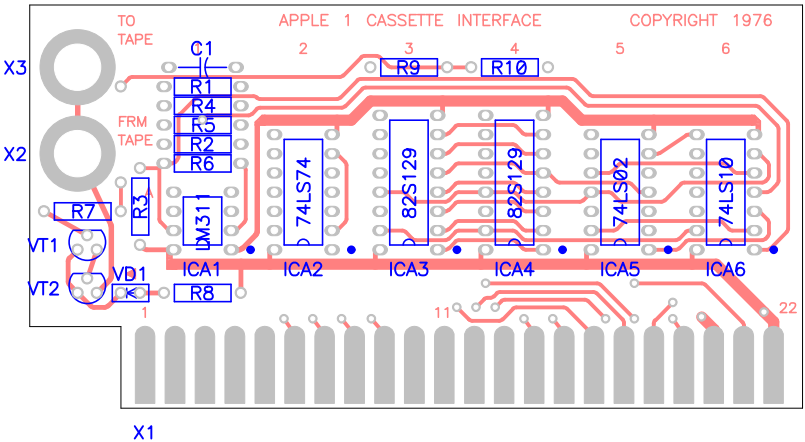
TO
TAPE
APPLE 1 CASSETTE INTERFACE
COPYRIGHT 1976
2
3
4
5
6
X3
C1
R9
R10
R1
R4
R5
R2
R6
FRM
TAPE
X2
R7
R3
LM311
74LS74
82S129
82S129
74LS02
74LS10
VT1
VT2
VD1
R8
ICA1
ICA2
ICA3
ICA4
ICA5
ICA6
1
11
22
X1